www.growland.net / www.growland-hydroponics.com
https://www.growland.fr / https://www.growland.co.uk
https://www.growland.es / https://www.growland.at
https://www.growland.nl / https://www.growland.it
https://www.growland.se / https://www.growland.pl

RVK SILEO 160E2-L 1PH/230V

Item no. 30342

Version: 50 Hz

Document type: **Product card**
Document date: **2014-07-30**
Generated by: **Systemair Online Catalogue**

Description

- Speed-controllable
- Integral thermal contacts acc. EN 60335-2-80
- Can be installed in any position
- Inclusive mounting bracket
- Maintenance-free and reliable

The RVK sileo series is designed for installation in ducts. The casing is manufactured from PP fibreglass reinforced plastic which gives the fan a less leckage casing. Duct connected wet room applications of the fan are possible due to the air tight casing and the IP 44 rated terminal box. We recommend a period of continued ventilation with dry air for wet room applications.The fans have high effective backward-curved blades (* BAT with special geometry) and external rotor motors. The FK mounting clamp facilitates easy installation and removal, and prevents the transfer of vibration to the duct. The fans can be speed-controlled via a stepless thyristor or a 5-step transformer. To protect the motor from overheating the models have integrated thermal contacts with manual reset.

* BAT = Best Available Technology

Technical parameters

Voltage	230	V
Frequency	50	Hz
Phase	1	~
Power	106	W
Current	0.461	A
Max. airflow	731	m³/h
Fan impeller speed	2557	r.p.m.
Max. temperature of transported air	70	°C
Max. temperature of transported air when voltage-controlled	70	°C
Sound pressure level at 3 m	44.4	dB(A)
Weight	3.2	kg
Insulation class, motor	F	
Enclosure class, motor	44	IP
Capacitor	3	µF

Performance

Diagrams

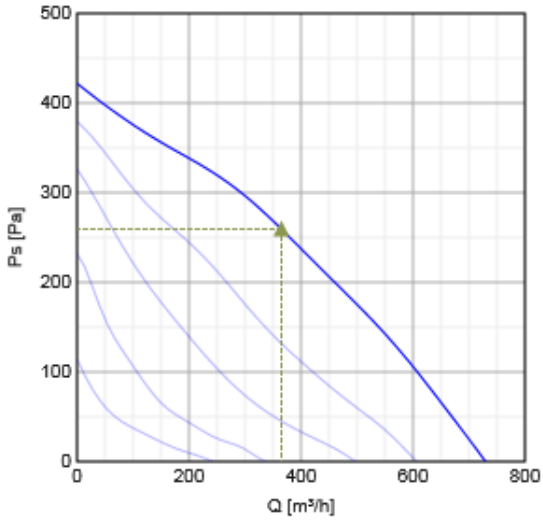

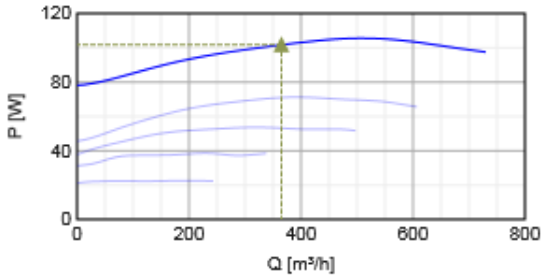

Hydraulic data

	Working point						
	Q [m³/h]	Ps [Pa]	P [W]	n [r.p.m.]	I [A]	SFP [kW/m³/s]	U [V]
Max efficiency	365	259	102	2575	0.452	1	230

Acoustic data

Sound power level		63	125	250	500	1k	2k	4k	8k	Tot
Inlet	dB(A)	46	63	62	63	63	61	57	47	70
Outlet	dB(A)	48	62	59	63	60	58	53	46	68
Surrounding	dB(A)	17	28	28	44	48	46	35	23	51

Dimensions

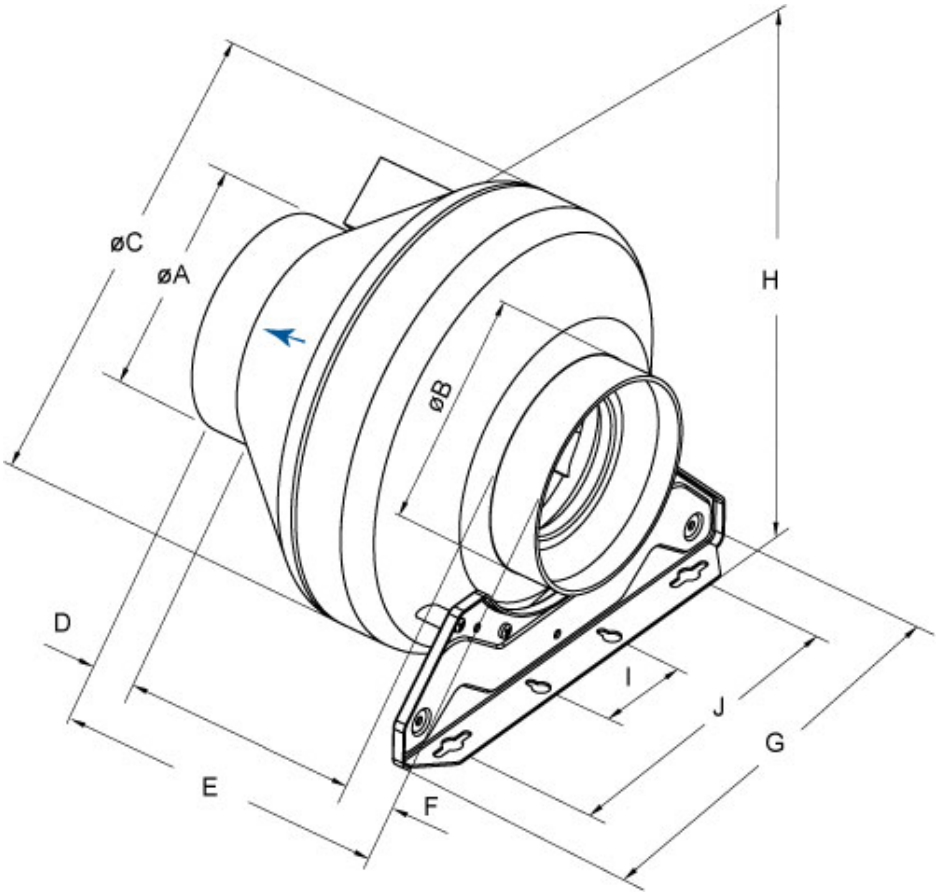

	øA	øB	øC	D	E	F	G	H	I	J
RVK 160	159	159	340,5	30	230	30	271,5	360	60	200
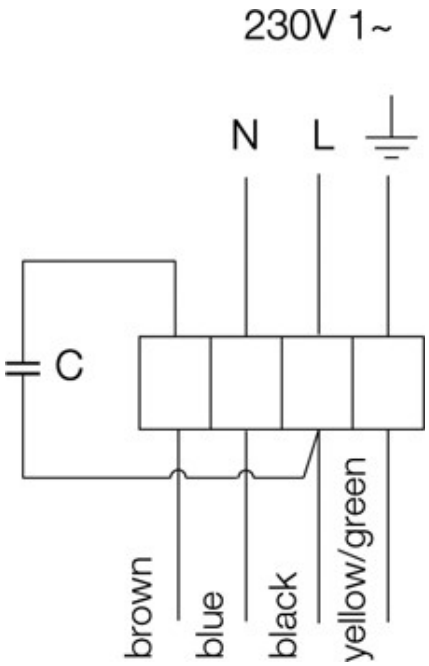
Wiring